# SFD SERIES

*SOLENOID FLOW DIVERTERS*

## SFD310



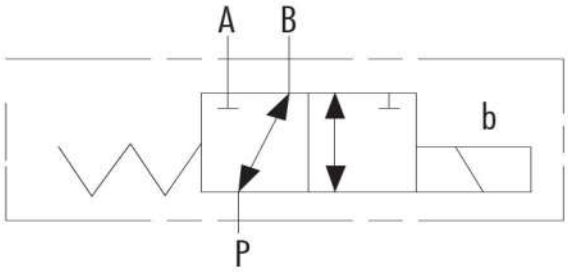


## TECHNICAL DATA

| | |
|---|---|
| Model | SFD310 |
| Max flow rate (L/min) | 80 |
| Max operating pressure (MPa) | 21 |
| Valve body (Material) Surface Treatment | (casting) phosphating surface |
| Oil cleanliness | NAS1638 class 9 and ISO4406 class 20/18/15 |

CARACTERISTIC CURVES (measured with HLP46, Voil=40° + -5°C)

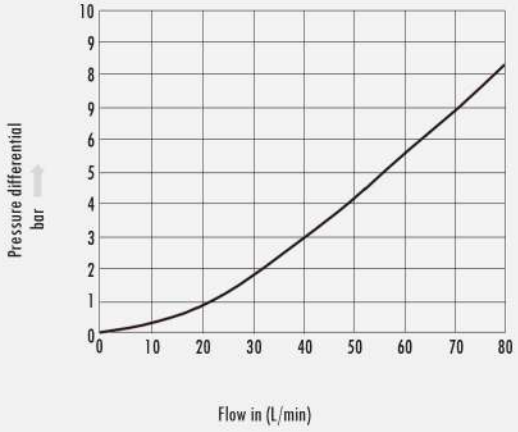

TECHNICAL SHEET

# DIVERTER VALVE 1/2 - 3 WAYS

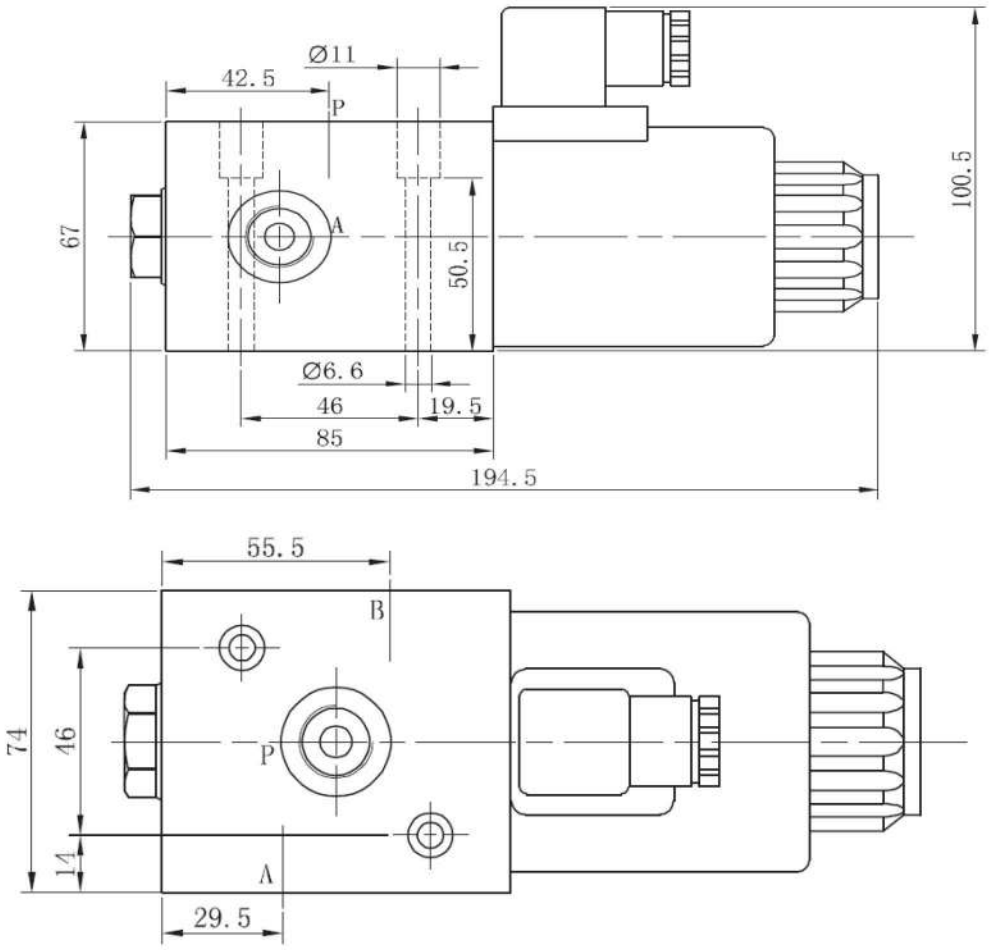


P, A, B = G 1/2"

| SFD3 | 10 | * |
|---|---|---|

Model

Size NG10

Voltage 12 = DC12;24 =DC24